MSC 4601
LSI-11 ADD-IN MEMORY

"Information contained in this manual is disclosed in confidence and may not be duplicated in full or in part by any person without prior written approval of Monolithic Systems Corporation. Its sole purpose is to provide the user with adequately detailed documentation so as to efficiently install, operate, maintain, and order spare parts for the system supplied. The use of this document for all other purposes is specifically prohibited.

COPYRIGHT © 1978 BY
MONOLITHIC SYSTEMS CORPORATION
14 Inverness Drive East
Englewood, Colorado, 80112
(303) 770-7400

TABLE OF CONTENTS

SECTION 1
UNIT DESCRIPTION

1.1 SCOPE
1.2 GENERAL DESCRIPTION
1.3 MODES OF OPERATION

SECTION 2
SPECIFICATIONS

2.1 SCOPE
2.2 SYSTEM SPECIFICATIONS
- 2.2.1 Storage Capacity
- 2.2.2 Cycle/Access Time
- 2.2.3 Power Requirements
- 2.2.4 Operating Environment
- 2.2.5 Physical Dimensions

SECTION 3
INSTALLATION

3.1 SCOPE
3.2 UNPACKING AND INSPECTION
3.3 INSTALLATION

SECTION 4
THEORY OF OPERATION

4.1 SCOPE
4.2 ADDRESS PROGRAMMING THE MSC 4601
4.3 ADDRESS CHANNEL
4.4 DATA CHANNEL
4.5 TIMING CIRCUITRY
4.6 DC-TO-DC CONVERTER
4.7 I/O SIGNALS

Table 4-1 STARTING ADDRESS
Table 4-2 BOARD CAPACITY

EXAMPLE 4-1 PROGRAMMING THE ADDRESS SWITCHES

SECTION 5
PREVENTIVE MAINTENANCE/TROUBLESHOOTING

5.1 SCOPE
5.2 PREVENTIVE MAINTENANCE
    5.2.1 Visual Inspection
    5.2.2 Cleaning
    5.2.3 DC Voltages
5.3 TROUBLESHOOTING

SECTION 6
WARRANTY

6.1 SCOPE
6.2 WARRANTY REGISTRATION

SECTION 7
DRAWINGS

303-0171-000 ASSEMBLY, LSI-11 MSC 4601 DOUBLE HIGH
305-0171-000 SCHEMATIC, LSI-11 MSC 4601 DOUBLE HIGH

SECTION 1
UNIT DESCRIPTION

1.1 SCOPE

This manual provides information for installing, operating, and maintaining the MSC 4601, LSI-11 add-in memory system. The material is arranged in seven sections as follows:

SECTION 1

Unit Description - This section provides the scope, contents and arrangement of the manual. A general description and a list of system specifications are also given.

SECTION 2

System Specifications - This section lists specifications and capabilities of the MSC 4601.

SECTION 3

Installation - Instructions are provided for unpacking, inspecting and installing the MSC 4601.

SECTION 4

Theory Of Operation - An overall description of the MSC 4601 is provided along with a timing diagram to aid in understanding the system and to support troubleshooting.

SECTION 5

Preventive Maintenance/Troubleshooting - This section gives recommended general maintenance procedures and troubleshooting information for diagnosing and locating a malfunction.

SECTION 6

Warranty - The warranty that applies to the MSC 4601 is outlined in this section.

SECTION 7

Drawings - This section contains schematics, assembly and parts list for the MSC 4601.

1.2 GENERAL DESCRIPTION

The MSC 4601 is a 32K X 16 add-in memory assembly for the DEC LSI-11 or 1103 micro-computer system. All electronics, DC-To-DC conversion and semiconductor dynamic N channel memory elements are contained on a single double-height, extended-length module.

All signal interfacing is to the DEC LSI-11 Que Bus which consists of 16 bidirectional data lines, 18 address lines and various control lines.

The memory system uses the +5V or +5VB, and +12V (or +12VB if available) power wired to the LSI-11 Bus. The -5V power is generated from the +12V line on the board.

The maximum capacity of the board is 32,768 words of 16 bits. The system can be configured in 1024 word increments, which allows the user to select a 1K, 2K, 3K or 4K I/O page.

The distributed refresh circuitry and memory elements can be powered from +5V and +12V battery back up sources so that data integrity can be maintained during a power failure.

1.3 MODES OF OPERATION

NAME	MNEMONIC	A0 LINE	FUNCTION
Data In	BDINL	X	Data from MSC 4601 to master
Data Out	BDOUTL (BWTBTL=0)	X	Data from master to MSC 4601
Data Out (byte)	BDOUTL (BWTBTL=1)	1	Bits 0-7 are affected
		0	Bits 8-15 are affected
RMW	BDINL BDOUTL	X	Data from MSC 4601 to master. Master modifies data and transmits data from master to MSC 4601. (Can be byte mode on master to MSC 4601 data).

SECTION 2
SPECIFICATIONS

2.1 SCOPE

This section lists the specifications of the MSC 4601.

2.2 SYSTEM SPECIFICATIONS

2.2.1 Storage Capacity

16,384 words X 16 bits
32,768 words X 16 bits

2.2.2 Cycle/Access Time

Cycle Time: 600 nanoseconds

Access Time: 250 nanoseconds

2.2.3 Power Requirements

DC Requirements: +5VB @ 0.5A
+5V @ 1.0A
+12V @ 0.7A
+12VB @ 0.1A (Refresh only)

2.2.4 Operating Environment

Operating Temperature: 0°C to +55°C

Storage Temperature: -40°C to +85°C

Relative Humidity: 90% maximum without condensation

2.2.5 Physical Dimensions

Height: 8.5 inches

Depth 0.5 inches

Width: 5.2 inches

SECTION 3
INSTALLATION

3.1 SCOPE

This section contains information for installation and operation of the MSC 4601.

3.2 UNPACKING AND INSPECTION

Carefully remove the memory system from the shipping container. Remove any packing material from the assembly. Inspect the system for any damage or loose connections.

3.3 INSTALLATION

Program the MSC 4601 per paragraph 4.2. Insert the memory system into the LSI-11 I/O bus in the A, B or C, D sections. The MSC 4601 is now ready for use.

SECTION 4
THEORY OF OPERATION

4.1 SCOPE

This section describes the overall organization and operation of the MSC 4601, and is divided into the following major parts:

DESCRIPTION	PARAGRAPH
Memory Location Programming	4.2
Address Channel	4.3
Data Channel	4.4
Timing Circuitry	4.5
DC-To-DC Converter	4.6
I/O Signals	4.7

4.2 ADDRESS PROGRAMMING THE MSC 4601

Memory location and board capacity programming are accomplished by two sets of DIP switches, SW1 and SW2. The board's memory starting location is set on SW2, while the board's capacity is set on SW1. Both switch sets are designed into the system to permit starting address to begin on any 1K boundary, and board capacity of 1K to 32K in 1K increments.

To set the starting address, set the switches on SW2 according to Table 4-1. To set the board capacity, consult Table 4-2.

When programming the switches, the "+" near one side of each switch set is used as a key for the tables. A one (1) means the switch is depressed on the "+" side, and a zero (0) means the switch is depressed on the side opposite of the "+" side.

EXAMPLE 4-1 If the board is to be set up for 16K capacity with a starting addres of 12K, Table 4-1 shows that switches 1 to 7 of SW2 should be set up for the bit pattern of 1110011. Switches 1 to 5 of SW1 should be set up with bit pattern 10000 as shown in Table 4-2. In the drawing below, shaded means the switch is depressed to that side.

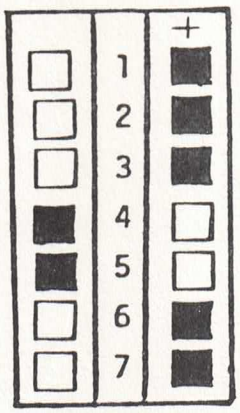

SW2

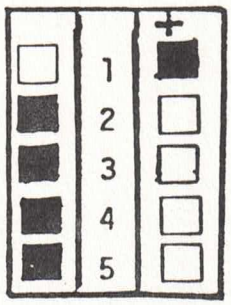

SW1

4.3 ADDRESS CHANNEL

When a memory cycle is initiated, the information on the BDAL <17:0> lines is immediately latched into a register using the leading edge of BSYNC L.

BDAL 00L is decoded when a byte mode cycle is to be performed (Refer to paragraph 1.3).

BDAL <14:1> are multiplexed in order to drive the array address lines A <6:0> .

BDAL <17:15> are decoded and buffered to generate the 16K or 32K column address strobe (CAS), which enables only one row of memory elements.

Decimal Words	Octal Bytes	SW2 1234567
0K	0000	1111111
1K	4000	1111110
2K	10000	1111101
3K	14000	1111100
4K	20000	1111011
5K	24000	1111010
6K	30000	1111001
7K	34000	1111000
8K	40000	1110111
9K	44000	1110110
10K	50000	1110101
11K	54000	1110100
12K	60000	1110011
13K	64000	1110010
14K	70000	1110001
15K	74000	1110000
16K	100000	1101111
17K	104000	1101110
18K	110000	1101101
19K	114000	1101100
20K	120000	1101011
21K	124000	1101010
22K	130000	1101001
23K	134000	1101000
24K	140000	1100111
25K	144000	1100110
26K	150000	1100101
27K	154000	1100100
28K	160000	1100011
29K	164000	1100010
30K	170000	1100001
31K	174000	1100000

Decimal Words	Octal Bytes	SW2 1234567
32K	200000	1011111
32K	204000	1011110
34K	210000	1011101
35K	214000	1011100
36K	220000	1011011
37K	224000	1011010
38K	230000	1011001
39K	234000	1011000
40K	240000	1010111
41K	244000	1010110
42K	250000	1010101
43K	254000	1010100
44K	260000	1010011
45K	264000	1010010
46K	270000	1010001
47K	274000	1010000
48K	300000	1001111
49K	304000	1001110
50K	310000	1001101
51K	314000	1001100
52K	320000	1001011
53K	324000	1001010
54K	330000	1001001
55K	334000	1001000
56K	340000	1000111
57K	344000	1000110
58K	350000	1000101
59K	354000	1000100
60K	360000	1000011
61K	364000	1000010
62K	370000	1000001
63K	374000	1000000

1=switch depressed on the plus side

Table 4-1

STARTING ADDRESS

Decimal Words	SW1 12345
1K	11111
2K	11110
3K	11101
4K	11100
5K	11011
6K	11010
7K	11001
8K	11000
9K	10111
10K	10110
11K	10101
12K	10100
13K	10011
14K	10010
15K	10001
16K	10000
17K	01111
18K	01110
19K	01101
20K	01100
21K	01011
22K	01010
23K	01001
24K	01000
25K	00111
26K	00110
27K	00101
28K	00100
29K	00011
30K	00010
31K	00001
32K	00000

1=Switch Depressed on the Plus side

Table 4-2

BOARD CAPACITY

Decimal Words	Octal Bytes	SW2 1234567
64K	400000	0111111
65K	404000	0111110
66K	410000	0111101
67K	414000	0111100
68K	420000	0111011
69K	424000	0111010
70K	430000	0111001
71K	434000	0111000
72K	440000	0110111
73K	444000	0110110
74K	450000	0110101
75K	454000	0110100
76K	460000	0110011
77K	464000	0110010
78K	470000	0110001
79K	474000	0110000
80K	500000	0101111
81K	504000	0101110
82K	510000	0101101
83K	514000	0101100
84K	520000	0101011
85K	524000	0101010
86K	530000	0101001
87K	534000	0101000
88K	540000	0100111
89K	544000	0100110
90K	550000	0100101
91K	554000	0100100
92K	560000	0100011
93K	654000	0100010
94K	570000	0100001
95K	574000	0100000

Decimal Words	Octal Bytes	SW2 1234567
96K	600000	0011111
97K	604000	0011110
98K	610000	0011101
99K	614000	0011100
100K	620000	0011011
101K	624000	0011010
102K	630000	0011001
103K	634000	0011000
104K	640000	0010111
105K	644000	0010110
106K	650000	0010101
107K	654000	0010100
108K	660000	0010011
109K	664000	0010010
110K	670000	0010001
111K	674000	0010000
112K	700000	0001111
113K	704000	0001110
114K	710000	0001101
115K	714000	0001100
116K	720000	0001011
117K	724000	0001010
118K	730000	0001001
119K	734000	0001000
120K	740000	0000111
121K	744000	0000110
122K	750000	0000101
123K	754000	0000100
124K	760000	0000011
125K	764000	0000010
126K	770000	0000001
127K	774000	0000000

1=Switch depressed on the plus side

Table 4-1 (cont)

STARTING ADDRESS

Decimal Words	SW1 12345
1K	11111
2K	11110
3K	11101
4K	11100
5K	11011
6K	11010
7K	11001
8K	11000
9K	10111
10K	10110
11K	10101
12K	10100
13K	10011
14K	10010
15K	10001
16K	10000
17K	01111
18K	01110
19K	01101
20K	01100
21K	01011
22K	01010
23K	01001
24K	01000
25K	00111
26K	00110
27K	00101
28K	00100
29K	00011
30K	00010
31K	00001
32K	00000

1=Switch Depressed on the Plus side

Table 4-2

BOARD CAPACITY

4.4 DATA CHANNEL

When a BDOUT L memory cycle (Refer to paragraph 1.3) is performed, the write data on the BDAL <15:0> lines is received, buffered, and applied directly to the memory element data inputs. There is no read data register.

A read-modify-write cycle is a combined BDIN L and then a BDOUT L cycle (Refer to paragraph 1.3).

4.5 TIMING CIRCUITRY

The MSC 4601 uses digital delay module circuits to generate all internal and I/O pulse.

The BSYNC L and BDOUT L or BDIN L are received by the MSC 4601 and generate a write or read cycle respectively. If the cycle is a write, then BRPLY L is sent back to the master unit, signifying receipt of data and address information. If a read cycle is requested, BRPLY L is delayed until data is on the BDAL <15:0> lines. BRPLY L during a read cycle is used to indicate to the master that data is valid on the bus.

The memory elements are dynamic N-channel devices that require refreshing every two milliseconds. The MSC 4601 uses distributed refresh such that a normal cycle may be extended by 400 nanoseconds no more then 3% of the time.

4.6 DC-TO-DC CONVERTER

The memory assembly contains a DC-To-DC Converter to generate -5V power from +12V power. The +12V is converted to a nominal 20 KHz signal, isolated, rectified and then regulated to -5V.

4.7 I/O SIGNALS

Pin	Signal	Pin	Signal	Pin	Signal	Pin	Signal
AA1	BSPARE 1	BA1	BDCOKH	AA2	+5	BA2	+5
AB1	BSPARE 2	BB1	BPOKH	AB2	-12	BB2	-12
AC1	BSPARE 3	BC1	SSPARE 4	AC2	GND	BC2	GND
AD1	BSPARE 4	BD1	SSPARE 5	AD2	+12	BD2	+12
AE1	SSPARE 1	BE1	SSPARE 6	AE2	BDOUTL	BE2	BDAL2L
AF1	SSPARE 2	BF1	SSPARE 7	AF2	BRPLYL	BF2	BDAL3L
AH1	SSPARE 3	BH1	SSPARE 8	AH2	BDINL	BH2	BDAL4L
AJ1	GND	BJ1	GND	AJ2	BSYNCL	BJ2	BDAL5L
AK1	MSPARE A	BK1	MSPAREB	AK2	BWTBTL	BK2	BDAL6L
AL1	MSPARE A	BL1	MSPAREB	AL2	BIRQL	BL2	BDAL7L
AM1	GND	BM1	GND	AM2	BIAKIL	BM2	BDAL8L
AN1	BDMRL	BN1	BSACKL	AN2	BIAKOL	BN2	BDAL9L
AP1	BHALTL	BP1	BSPARE 6	AP2	BBS7L	BP2	BDAL10L
AR1	BREFL	BR1	BEVNTL	AR2	BDMGIL	BR2	BDAL11L
AS1	+ 12 VB	BS1	PSPARE 4	AS2	BDMGOL	BS2	BDAL12L
AT1	GND	BT1	GND	AT2	BINITL	BT2	BDAL13L
AU1	PSPARE 1	BU1	PSPARE 2	AU2	BDALOL	BU2	BDAL14L
AV1	+5B	BV1	+5	AV2	BDALIL	BV2	BDAL15L

Slot (Row) C is identical to slot A.
Slot D is identical to slot B.

SECTION 5
PREVENTIVE MAINTENANCE/TROUBLESHOOTING

5.1 SCOPE

This section presents troubleshooting instructions for ease of trouble location. Further localization of the trouble is to be found by means of the maintenance drawings in Section 7. The theory of operation in Section 4 should be read and understood along with a detailed review of the schematics in order to make effective use of this section.

5.2 PREVENTIVE MAINTENANCE

5.2.1 Visual Inspection

This inspection includes checking for loose programming wires, components and discoloration of parts. The inspection should be performed with a minimum of prying or moving of parts.

5.2.2 Cleaning

Cleaning should be limited to removal of excess dust or particles. Never use any abrasive on any part of the gold fingers on the edge connectors. Low pressure compressed air can be used for removing dust or dirt and an aerosol clearner can be used with light brushing to clean the gold contacts.

5.2.3 DC Voltages

The DC voltages should be maintained as follows:

+5V ± 5% +12V ± 5%

5.3 TROUBLESHOOTING

To facilitate troubleshooting, the following information, cause and effect can be used as a guide to isolate the problem to a particular area. From there on, the schematics should be used to determine the exact component that is at fault.

EFFECT	CAUSE
Single bit failure all addresses.	Data receiver/driver
Complete byte failure all addresses	BDALOL circuitry/WE circuitry
Complete word failure all addresses	DC voltages/refresh not working/ bus en pulse/ BDALOL circuitry/ WE pulse.
Single bit failure single address	Memory element
Complete word failure, a 4K section	RAS driver/RAS programming jumpers/ address register for A13L and A14L.
Complete byte failure a 4K section	RAS driver/RAS programming jumpers/ address register for A13L and A14L.
Complete or major part of word failure, 2 addresses	Address receiver/address register/ address buffer.
Timeout	Switch programming/BRPLY not generated/ BDAL13L-BDAL15L comparison circuit.
Non-retention of data	Refresh circuit/DC voltages.

SECTION 6
WARRANTY

6.1 SCOPE

Monolithic Systems Corporation (MSC) warrants for a period of twelve (12) months from the date of shipment that each item of equipment (except those materials supplied by Buyer) shall be free from defects in material and workmanship under normal use and service. Any equipment which is not as warranted may be returned to Monolithic Systems Corporation at MSC's risk and expense for repair or replacement.

If the Buyer establishes that anyone of the items of equipment is not as warranted above in order to benefit from the warranty, the Buyer shall advise Monolithic Systems Corporation in writing during the warranty period describing in detail the defect claimed. Monolithic Systems Corporation shall thereafter be afforded the opportunity, for a reasonable period of time after the defective equipment is returned to Monolithic Systems Corporation place of manufacture, to modify, adjust or repair such item of equipment in order to render it in conformity with the above warranty. If at the end of such period, the Buyer establishes that such item of equipment is still not in conformity with the above warranty, then Monolithic Systems Corporation shall replace the defective item at its expense or may refund the purchase price of such item of equipment to the Buyer. The Buyer recognizes that the remedy of refund

of the purchase price in the case of the breach by Monolithic Systems Corporation of the above warranty constitutes the sole and exclusive remedy to the Buyer for such breach. Equipment may consist in whole or in part, of refurbished components which are warranted equivalent to new when used for the purposes intended.

This warranty shall immediately terminate if the equipment is subjected to misuse, neglect, accident, damage in transit, transported in other than Monolithic Systems Corporation authorized containers, or is altered, repaired or overhauled by any person other than Monolithic Systems Corporation.

THE FOREGOING WARRANTY IS IN LIEU OF ALL OTHER WARRANTIES, PROMISES, AFFIRMATIONS OR REPRESENTATIONS, WHATSOEVER, EXPRESS OR IMPLIED, INCLUDING, BUT NOT LIMITED TO, ANY IMPLIED WARRANTY OF MERCHANTABILITY OR IMPLIED WARRANTY OF FITNESS OF EQUIPMENT FOR A PARTICULAR PURPOSE, AND OF ANY OTHER OBLIGATIONS ON THE PART OF THE SELLER.

6.2 WARRANTY REGISTRATION

To expedite our warranty service, please fill out the WARRANTY REGISTRATION card at the front of this manual, and return to Monolithic Systems Corporation.

REVISIONS

REV	ECO	DESCRIPTION	DATE	APP.
A	0760	RELEASED TO MANUFACTURING	9/22/77	BWS
B	0796	ADDED -050 & -051	10-18-77	BWS
C	0809	REVISED PER ECO C	10-28-77	[illegible]
D	0830	REVISED PER ECO D	11-15-77	[illegible]
E	0855	REVISED PER ECO E	11-30-77	[illegible]
F	0923	REVISED PER ECO F	1-27-78	BWS
G	1007	REVISED PER ECO G	4-10-78	BWS
H	1080	REVISED PER ECO H	6-13-78	BWS
J	1222	RAISED EQUIP. REV. TO "H" H	9/14/78	BWS
K	1336	REVISED PER ECO J	11/15/78	D.F.C
L	1395 1418	CHANGED PER ECO	2/5/79	D.F.C

1 INSTALL ITEM 42 (IN PC BOARD) IN HOLES USED TO MOUNT ITEMS 6 & 21.

NOTES: Unless Otherwise Specified:

EQUIP. REV. LEVEL ALL DASH NO: "J"

THIS DOCUMENT IS PROPRIETARY AND SHALL NOT BE FORWARDED TO ANY NON-COMPANY OFFICES OR INDIVIDUALS WITHOUT THE WRITTEN CONSENT OF MONOLITHIC SYSTEMS CORP.

REV STATUS OF SHEETS							
REV							
SHEET							
REV	L	L	K	D	K	K	
SHEET	1	2	3	4	5	6	

UNLESS OTHERWISE SPECIFIED DIMENSIONS ARE IN INCHES. TOLERANCES ARE:

MATERIAL

		DATE
DRAWN	D.P.S.	9/20/77
CHECKED	KAC	9/22/77
APPROVED	[illegible]	9/22/77
APPROVED		

MONOLITHIC SYSTEMS CORP.

LSI-11

MSC 4601 DOUBLE HIGH

SIZE	CODE IDENT NO.	DWG NO.
A	51513	303-0171-000

SCALE NONE | REV L | SHEET 1 of 6

*LOCATED ON PAGE $

DASH NO.	CONFIGURATION	ACCESS TIME (ns)		MEMORY ELEM. QTY./DASH NO. GROUP I*				MEM. ELEM LOCATION*			X INDICATES JUMPER INSTALLED E3 (+12VB)	E4 (+12 ONLY)	317-0053-001 MOD. INST.	317-0057-002	317-0057-001
001	32Kx16	350		32				A				X			X
002	16Kx16	350		16				B				X			X
003															
004															
005															
006															
007															
008															
009	32Kx16	350		32				A			X			X	
010	16Kx16	350		16				B			X			X	
011															
012															
013															
014															
015															
016															
044	16K x 16	-	-	16	-	-	-	B	1	-	-	X	-		
045	16K x 16	-	-	16	-	-	-	B	1	-	X	-	-		
046	32K x 16	-	-	32	-	-	-	A	1	-	-	X	-		
047	32K x 16	-	-	32	-	-	-	A	1	-	X	-	-		
048	16K x 16	350		16				B				X	X		X
049	16K x 16	350		16				B			X		X	X	
050	32K x 16	350		32				A				X	X		X
051	32K x 16	350		32				A			X		X	X	

SIZE	CODE IDENT NO.	DWG NO.
A	51513	303-0171-000
SCALE NONE	REV L	SHEET 2

MEMORY ELEMENTS

GROUP I

210-1020-001
210-1020-002
210-1020-003
210-1020-005
210-1020-006
210-1020-007
210-1020-015
210-1020-016
210-1020-032
210-1020-036
210-1020-037
210-1020-039
210-1020-041
210-1020-042
210-1020-047

MEMORY ELEMENT LOCATIONS

A

U101-U132

B

U109-U116
U125-U132

C

D

SIZE	CODE IDENT NO.	DWG NO.
A	51513	303-0171-000
SCALE	REV K	SHEET 3

MSF-1005 REV A

QTY/DASH NO.				LIST OF MATERIAL				ITEM NO.
			ALL	PART NO.	DESCRIPTION	MATERIAL OR NOTE	SPECIFICATION	
			1	304-0171-001	P.C. BOARD REV. B			1
			1	210-0942-001	I.C. 3242	U10		2
			4	210-0319-001	I.C. DS 36149	U1,4,5,11,	NATIONAL	3
			5	210-0103-001	I.C. SN 7404	U2,3,7,17,35		4
			5	210-0605-005	I.C. SN74LS75	U6,8,9,13,14,		5
			1	210-0501-001	I.C. 7414	U20		6
			3	210-0800-001	I.C. SN7402	U12,19,33,		7
			4	210-0904-001	I.C. SN7483	U15,16,23,24		8
			1	210-0504-001	I.C. SN74123	U18		9
			4	210-0408-001	I.C. DS8641	U21,22,31,32	NATIONAL	10
			1	210-0109-001	I.C. SN7420	U25		11
			1	210-0105-001	I.C. SN7410	U26		12
			2	210-0100-001	I.C. SN7400	U27,38		13
			1	210-0642-005	I.C. SN74LS279	U28		14
			1	210-0803-001	I.C. SN7427	U29		15
			1	210-0318-001	I.C. SN7439	U30		16
			2	223-0002-006	DIGITAL DELAY MODULE	U34,37	20105 ,21220	17
			1	223-0002-003	DIGITAL DELAY MODULE	U36	20102	18
			2	210-1104-001	I.C. 8640	U39,40		19
			2	214-0007-260	RESISTOR NETWORK 1K	RN1,RN2	16 PIN DIP	20
			1	215-0008-005	SWITCH	SW1	7 POSITION DIP SWITCH	21

SIZE A

CODE IDENT NO 51513

DWG NO. 303-0171-000

REV D

SHEET 4

QTY/DASH NO.				LIST OF MATERIAL				ITEM NO.
			ALL	PART NO.	DESCRIPTION	MATERIAL OR NOTE	SPECIFICATION	
			13	214-0002-073	RESISTOR 1K, 1/4W,5%	R1,2,5,6,7,9-16		22
			1	214-0002-093	RESISTOR 6.8K, 1/4W,5%	R8		23
								24
			2	206-0015-001	DIODE IN4934	CR1,2		25
			1	301-0033-001	INDUCTOR	L1		26
			1	216-0003-001	TRANSFORMER PE60205	T1		27
			2	217-0004-001	TRANSISTOR 2N3903	Q1,Q2		28
			1	210-1114-001	REGULATOR	Q3	MC79L05AC	29
			1	214-0002-091	RESISTOR 5.6K, ¼W, 5%	R3		30
			14	201-0018-002	CAP. 2.2uf, 25V	C1,2,6-13,18-20,		31
			5	201-0018-001	CAP. 6.8uf, 10V	C3,14-17,		32
			1	201-0020-050	CAP. .0047 200V.	C5	ORANGE TUBULAR	33
			1	215-0008-003	SWITCH	SW2	5 POSITION DIP SWITCH	34
			38	701-0001-003	CAP. .1uf,50V	C21-58		35
			1	214-0002-065	RESISTOR 470 ,¼W, 5%	R4		36
			5	208-0075-001	BUSBAR			37
			32	204-0059-403	HEADERS			38
			2	208-0057-002	CARD PULL			39
			REF	308-0071-000	P.T.R.			40
			4	208-0011-001	RIVET	CARD PULLS		41
			24	208-0089-001	EYELETS	△1		42
			1	317-0057-001	MODIFICATION INSTRUCTION	REV D		43

SIZE A

CODE IDENT NO 51513

DWG NO. 303-0171-000

REV K

SHEET 5

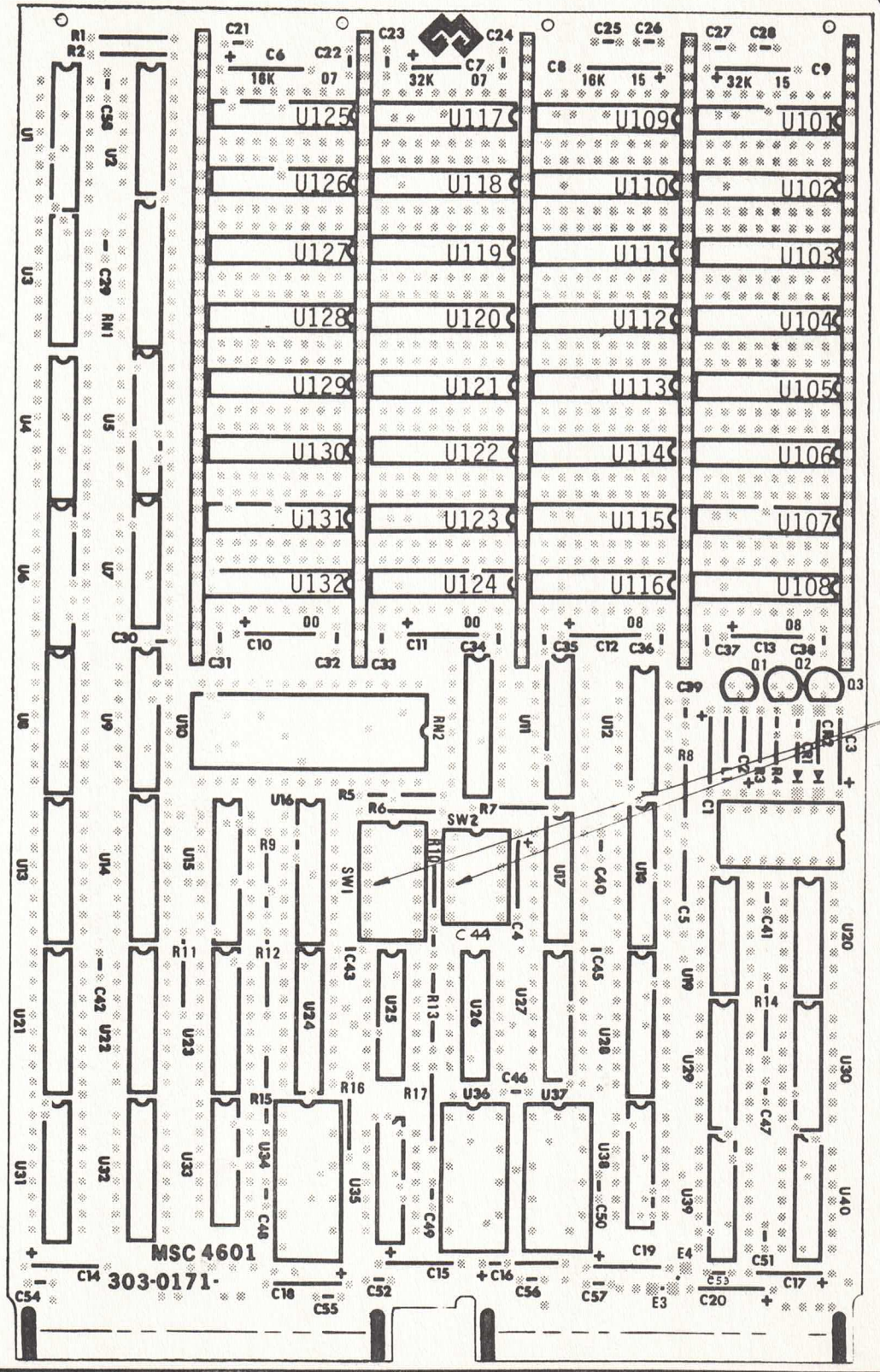

SIZE	CODE IDENT NO.	DWG NO.
A	51513	303-0171-000
SCALE	REV K	SHEET 6

REVISIONS				
LTR	ECO	DESCRIPTION	DATE	APPRV'D
H	1336	CHANGED PER ECO		

3. "*" DENOTES BATTERY BACK-UP
2. LAST REFERENCE DESIGNATIONS USED: C58; CR2; L1; Q3; R16; RN2; SW2; T1; U40
1. ALL RESISTANCES IN OHMS, 1/4W, 5%

NOTES: UNLESS OTHERWISE SPECIFIED

REV	H	H	H	H	H	H	H	H
SHEET	1	2	3	4	5	6	7	8

REVISION STATUS OF SHEETS

DRAWN	[signature]	12-15-78
CHECKED	Dale C	12-15-78
APPROVED	K Campbell	12-15-78
APPROVED		

MONOLITHIC SYSTEMS CORP.
Englewood, Colorado 80110

TITLE SCHEMATIC, LSI-11-MSC 4601, DOUBLE HIGH

SIZE	CODE IDENT NO.	DWG NO.	REV
B	51513	305-0171-000	H

SCALE [illegible] SHEET 1 of 8

LAST USED									
NOT USED									
LAST USED									
NOT USED									

REFERENCE DESIGNATIONS LAST USED/NOT USED

MSF 1052

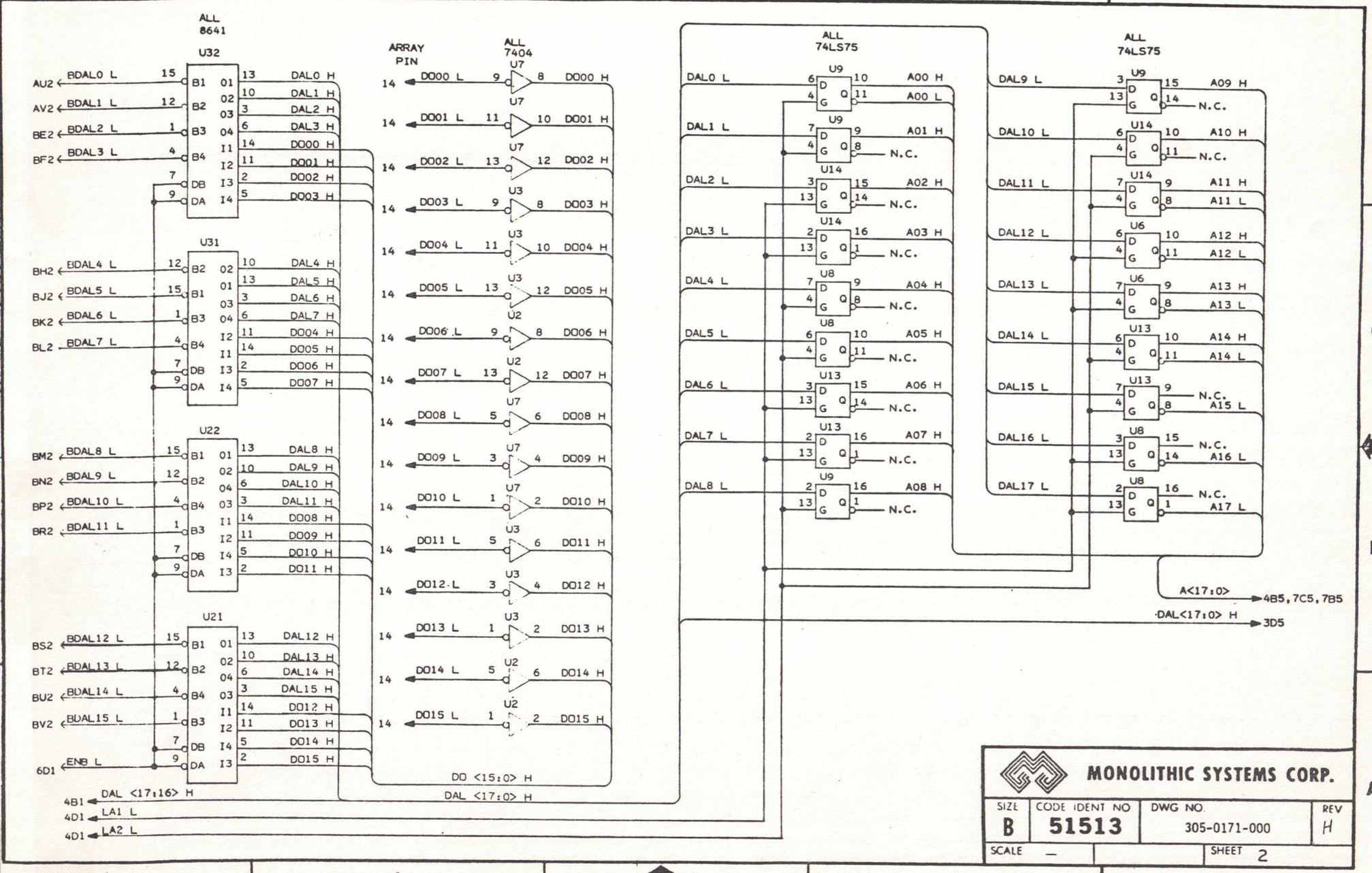
ALL 8641
U32
U31
U22
U21
AU2 BDAL0 L
AV2 BDAL1 L
BE2 BDAL2 L
BF2 BDAL3 L
BH2 BDAL4 L
BJ2 BDAL5 L
BK2 BDAL6 L
BL2 BDAL7 L
BM2 BDAL8 L
BN2 BDAL9 L
BP2 BDAL10 L
BR2 BDAL11 L
BS2 BDAL12 L
BT2 BDAL13 L
BU2 BDAL14 L
BV2 BDAL15 L
6D1 ENB L
4B1 DAL <17:16> H
4D1 LA1 L
4D1 LA2 L
ARRAY PIN
ALL 7404
DO <15:0> H
DAL <17:0> H
ALL 74LS75
A<17:0> 4B5,7C5,7B5
DAL<17:0> H 3D5
N.C.
MONOLITHIC SYSTEMS CORP.
SIZE B
CODE IDENT NO 51513
DWG NO 305-0171-000
REV H
SCALE —
SHEET 2
MSF - 1008A-1

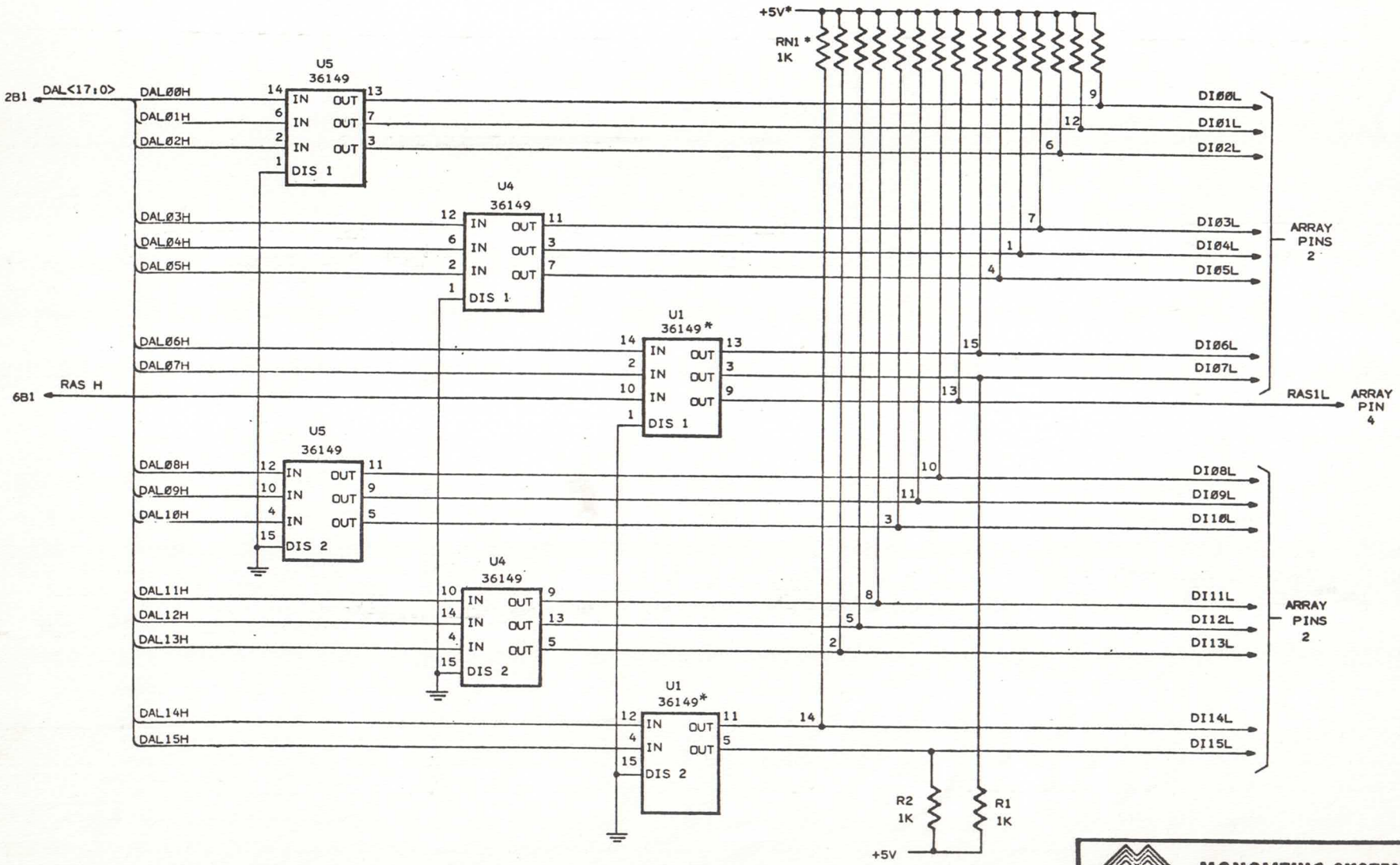

MONOLITHIC SYSTEMS CORP.

SIZE	CODE IDENT NO	DWG NO	REV
B	51513	305-0171-000	H
SCALE —		SHEET 3	

MSF - 1008A-1

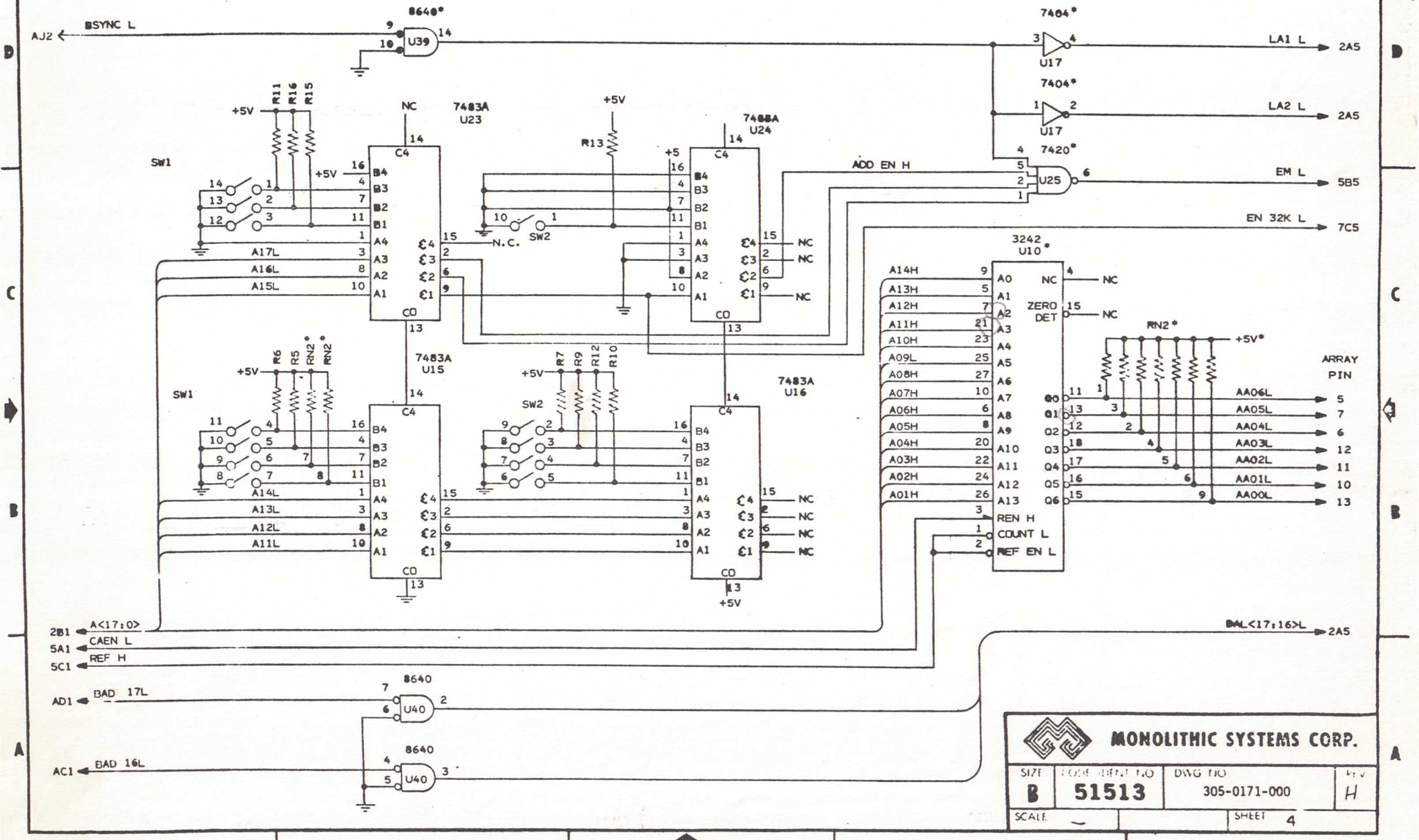
AJ2
BSYNC L
8640*
U39
7404*
U17
LA1 L
2A5
LA2 L
7420*
U25
EM L
5B5
EN 32K L
7C5
ADD EN H
7483A
U23
7488A
U24
7483A
U15
7483A
U16
3242
U10*
ZERO DET
RN2*
+5V*
ARRAY PIN
AA06L
AA05L
AA04L
AA03L
AA02L
AA01L
AA00L
SW1
SW2
N.C.
A17L
A16L
A15L
A14L
A13L
A12L
A11L
A14H
A13H
A12H
A11H
A10H
A09L
A08H
A07H
A06H
A05H
A04H
A03H
A02H
A01H
REN H
COUNT L
REF EN L
2B1
A<17:0>
5A1
CAEN L
5C1
REF H
BAL<17:16>L
AD1
BAD 17L
AC1
BAD 16L
8640
U40
MONOLITHIC SYSTEMS CORP.
SIZE
B
CODE IDENT NO
51513
DWG NO
305-0171-000
REV
H
SCALE
SHEET
4
MSF-1008A-1

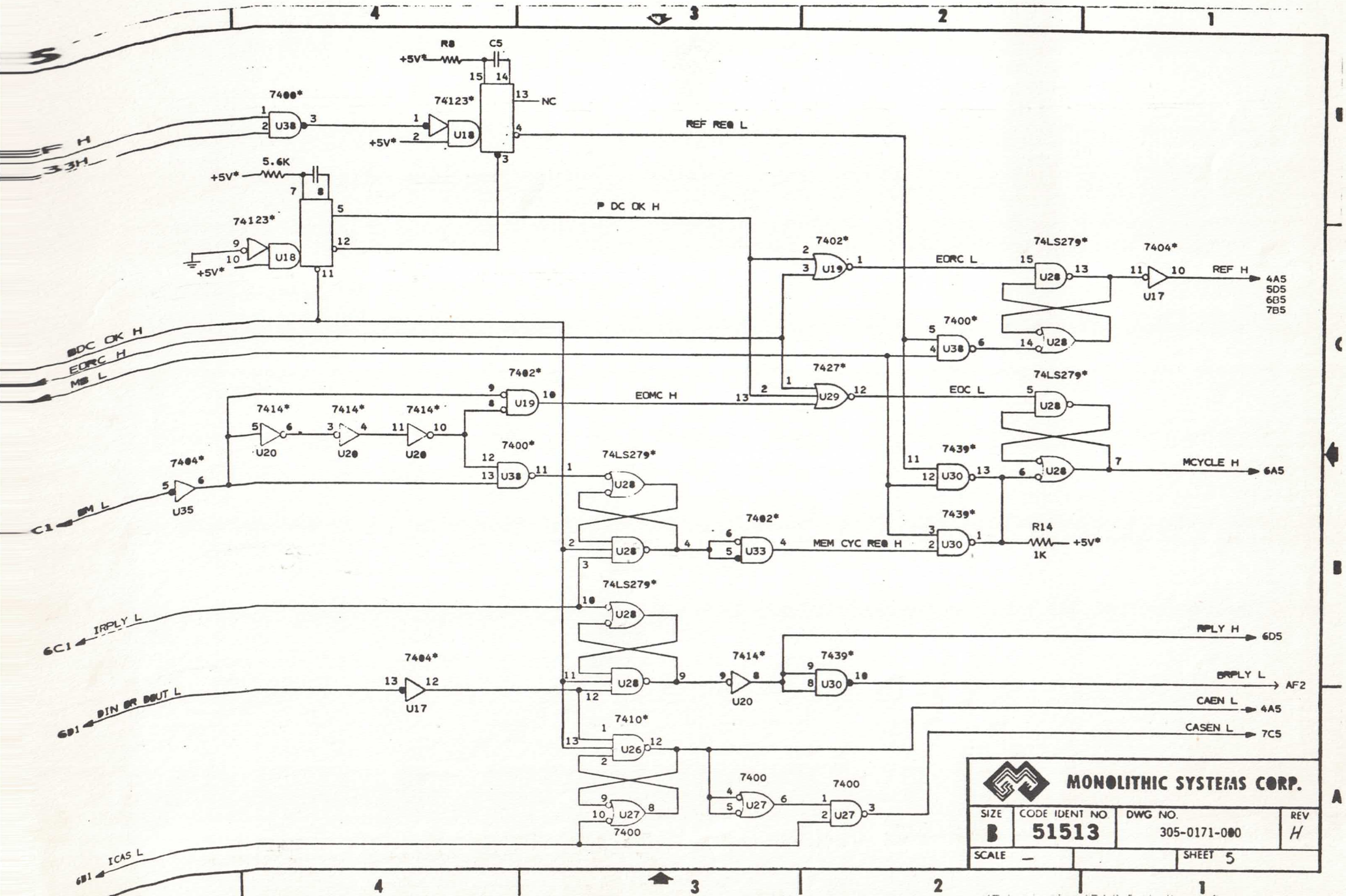

R8
C5
+5V*
7400*
U38
74123*
U18
NC
REF REQ L
5.6K
P DC OK H
7402*
U19
EORC L
74LS279*
U28
7404*
U17
REF H
4A5
5D5
6B5
7B5
7400*
BDC OK H
EORC H
MB L
7427*
U29
EOMC H
EOC L
7414*
U20
7439*
U30
MCYCLE H
6A5
7404*
U35
BM L
C1
MEM CYC REQ H
R14
1K
IRPLY L
6C1
RPLY H
6D5
BRPLY L
AF2
DIN BR DOUT L
6D1
CAEN L
4A5
CASEN L
7C5
7410*
U26
U27
ICAS L
6B1
MONOLITHIC SYSTEMS CORP.
SIZE
B
CODE IDENT NO
51513
DWG NO.
305-0171-000
REV
H
SCALE
SHEET 5

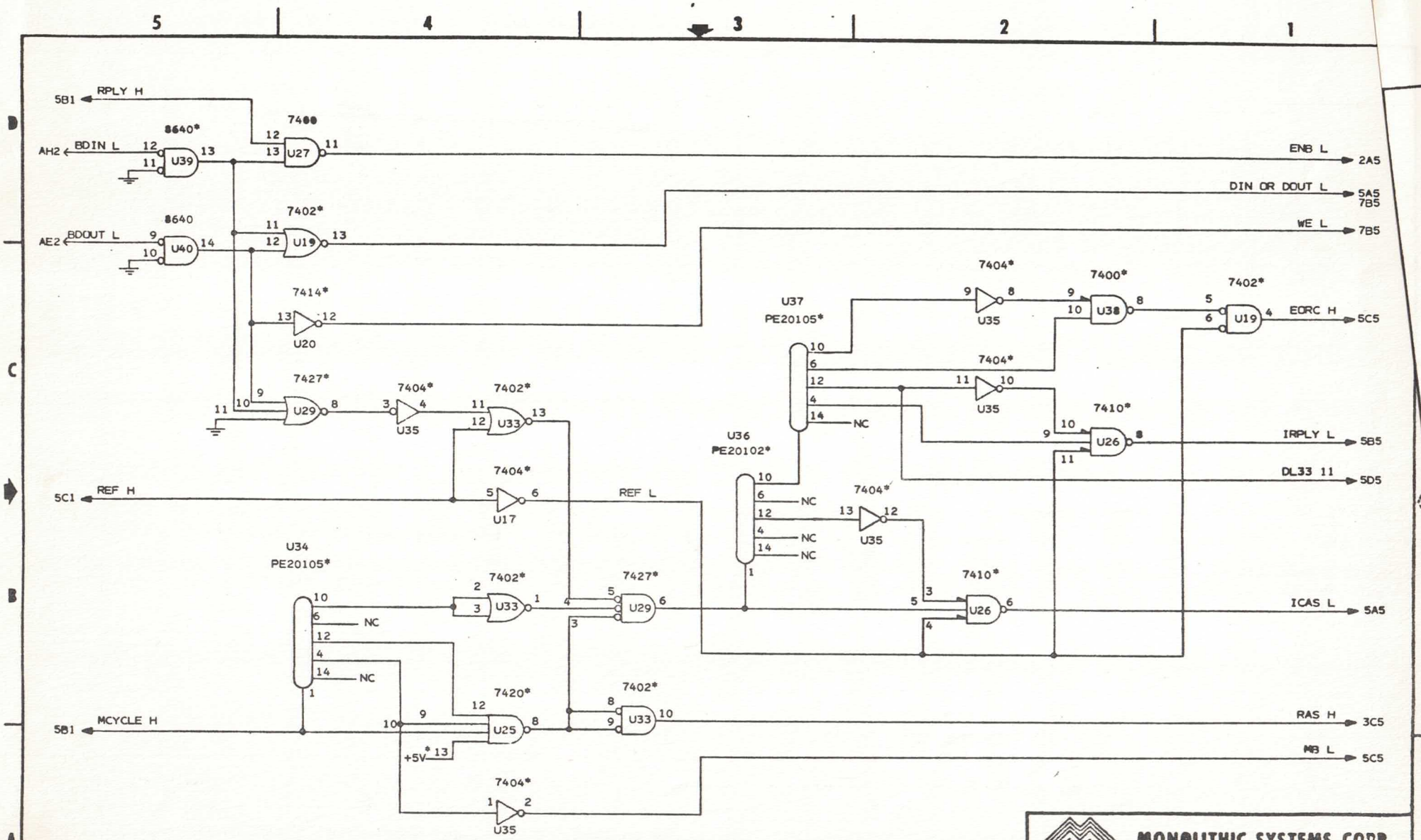

MONOLITHIC SYSTEMS CORP.

SIZE	CODE IDENT NO	DWG NO	REV
B	51513	305-0171-000	H
SCALE —		SHEET 6	

MSF - 1008A-1

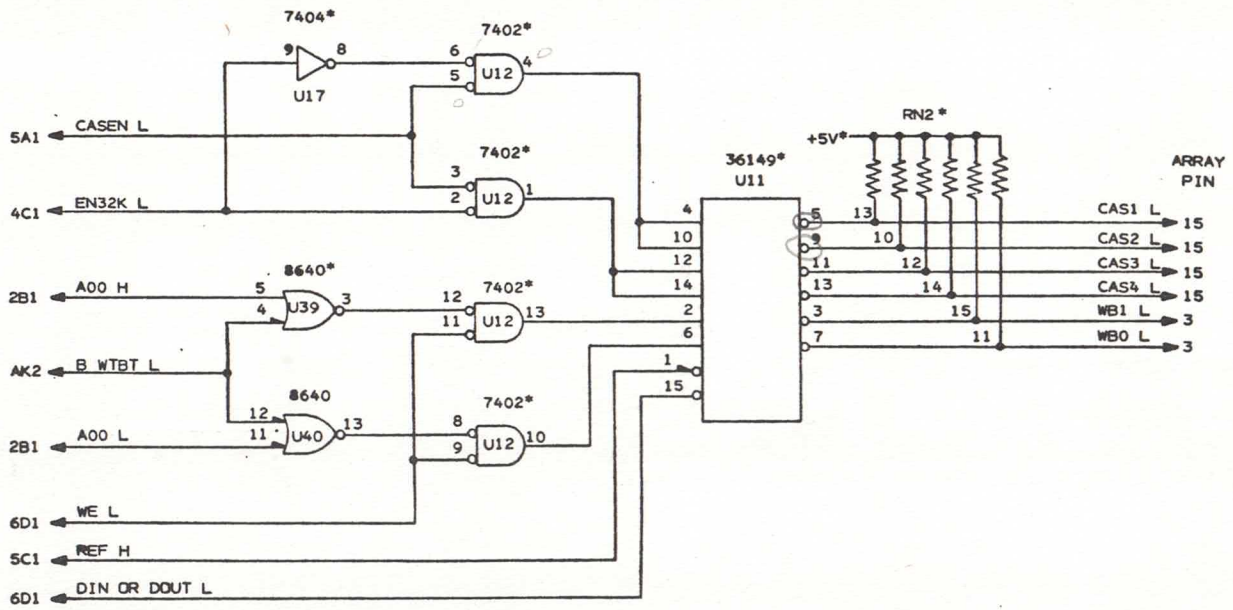

MONOLITHIC SYSTEMS CORP.

SIZE	CODE IDENT NO	DWG NO	REV
B	51513	305-0171-000	H
SCALE —		SHEET 7	

MSF - 1008A-1

DEVICE TYPE NO.	REFERENCE DESIGNATION	NOTE	POWER & GROUND							REMARKS/SPARES	LINE NO.
			GND	+5V							
I.C. 7400			7	14							1
I.C. 7402			7	14							2
I.C. 7404			7	14							3
I.C. 7410			7	14							4
I.C. 7414			7	14							5
I.C. 7420			7	14							6
I.C. 7427			7	14							7
I.C. 7439			7	14							8
I.C. 74LS75			12	5							9
I.C. 7483			12	5							10
I.C. 74123			8	16							11
I.C. 74LS279			8	16							12
I.C. 3242			12	24							13
I.C. DS8640			1	8							14
I.C. DS8641			8	16							15
I.C. DS36149			8	16							16

DEVICE TYPE NO.	REFERENCE DESIGNATION	NOTE	POWER & GROUND							REMARKS/SPARES	LINE NO.
			GND	+5V							

MONOLITHIC SYSTEMS CORP.

SIZE	CODE IDENT NO	DWG NO.	REV
B	51513	305-0171-000	H
SCALE —		SHEET 8	

MSF - 1008A